REVISIONS			
REV	DESCRIPTION	DATE	APPROVED
1	INITIAL RELEASE	11/12/15	RAJA
2	ALPHA RELEASE	23/12/15	RAJA
3	BETA RELEASE	21/01/16	RAJA

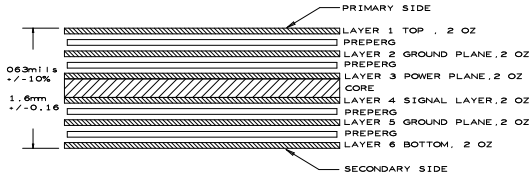

NOTES:(UNLESS OTHERWISE SPECIFIED)

1. RoHS COMPLIANT CERTIFICATION OR MATERIAL DECLARATION REQUIRED.
2. MATERIAL:
   A. IS410 OR EQUIVALENT. MATERIAL MUST CONFORM TO UL94V-0.
   B. USE HTE COPPER, AS SPECIFIED IN THE CROSS SECTION DIAGRAM.
   C. OVERALL METAL TO METAL THICKNESS AS SPECIFIED IN THE CROSS SECTION.
3. DRILLING:
   A. DIAMETERS IN DRILL TABLE ARE FINISHED HOLE SIZES +/-.003 tol. UNLESS OTHERWISE SPECIFIED IN DRILL TABLE.
   B. TEARDROP ALLOWED ON ENTRY OF VIA ON EVERY TRACE LAYER.
4. PLATING:
   COPPER PLATING IN THRU-HOLES .001 min.
5. MARKING:
   A. SILKSCREEN IN WHITE NON-CONDUCTIVE EPOXY INK ON PRIMARY SIDE OF THE BOARD OR BOTH SIDES IF APPLICABLE.
   B. FABRICATOR TO PLACE DATE CODE, LOGO AND RoHS COMPILANT SYMBOL IN SILKSCREEN ON SECONDARY SIDE.
6. FINAL FABRICATION:
   A. SOLDRMASK PRIMARY AND SECONDARY SIDE OF BOARD USING LIQUID PHOTOIMAGABLE MASK MATERIAL OVER BARE COPPER. PER IPC-SM-840. MASK ARTWORKS PROVIDED ARE 1:1. SOLDERMASK COLOR **BLUE**
7. FINISH:
   A. SHALL BE ELECTROLESS NIKEL & IMMERSION GOLD(ENIG).
   B. NICKEL THICKNESS: 100-200 MICROINCHES.
   C. GOLD THICKNESS: 3-10 MICROINCHES.
8. BOARDS SHALL BE PURCHASED FROM UL RECOGNIZED VENDORS ONLY. FLAMABILITY RATING (94-VO).
9. MANUFACTURE BOARD TO BE IN ACCORDANCE WITH PERFORMANCE STANDARD IPC-6011/6012 CLASS 2 BOARD TO BE INSPECTED PER IPC-600-A CLASS 2.
10. MAXIMUM WARP OR TWIST SHALL NOT EXCEED .007 in/in.
11. TESTING:
   A. FABRICATOR TO ADD TEST STRUCTURES OR CUPONS AS NEEDED.
   B. T-LINE IMPEDENCE TO BE TESTED OR GUARANTEE WITHIN 10% IF SPECIFIED IN THE CROSS SECTION. TOLERANCE TO BE +/-10% UNLESS OTHERWISE SPECIFIED.
12. VIA FILLING REQUIRED FOR ALL VIAS.

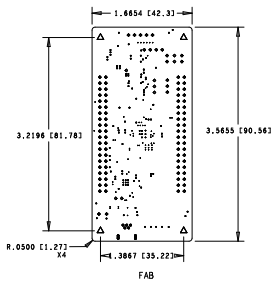

FAB

DRILL CHART: TOP to BOTTOM				
ALL UNITS ARE IN MILLIMETERS				
FIGURE	SIZE	TOLERANCE	PLATED	QTY
·	0.2032	+0.0762/-0.0762	PLATED	72
·	0.254	+0.0/-0.254	PLATED	17
·	0.254	+0.0762/-0.0762	PLATED	78
·	0.381	+0.0762/-0.0762	PLATED	13
●	0.7112	+0.0762/-0.0762	PLATED	5
⊕	1.016	+0.0762/-0.0762	PLATED	104
△	3.175	+0.0508/-0.0508	NON-PLATED	4
B	1.0999±0.701	+0.0762/-0.0762	PLATED	2

UNLESS OTHERWISE SPECIFIED
DIMENSIONS ARE IN INCHES
TOLERANCES ON: ANGLES +/- 2°
2 PL DECIMALS +/- .010
3 PL DECIMALS +/- .005
THIRD ANGLE PROJECTIONS

CYPRESS PROPRIETARY
THIS DOCUMENT CONTAINS CONFIDENTIAL, PROPRIETARY INFORMATION THAT IS CYPRESS SEMICONDUCTOR PROPERTY. DO NOT DISCLOSE TO OR DUPLICATE FOR OTHERS EXCEPT AS AUTHIRIZED BY CYPRESS.

SIGNATURES		DATE
DRAWN :	HUSAIN	21/01/16
CHECKED :	RAJA	21/01/16
ENGRG :	RAGO	21/01/16
ISSUED		

CYPRESS SEMICONDUCTOR
198 CHAMPION COURT
SAN JOSE, CA 95134
(408) 943-2600

FABRICATION DRAWING
CY4531 CCG3 DAUGHTER CARD

SIZE	FSCM NO	DRG NO	REV
C		610-60301-01	03

SCALE: 1/1 SHEET: 1 OF 1

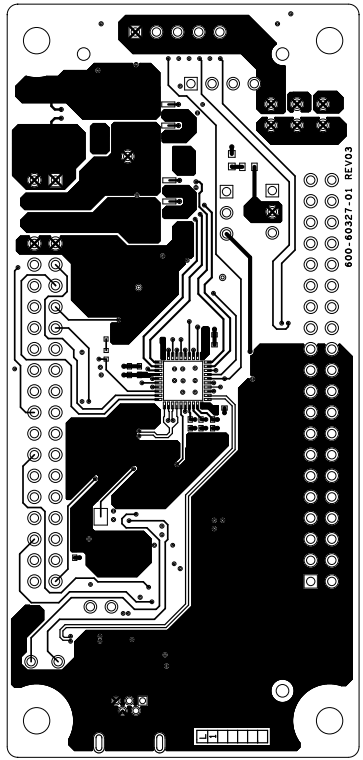

600-60327-01 REV03 PRIMARY SIDE

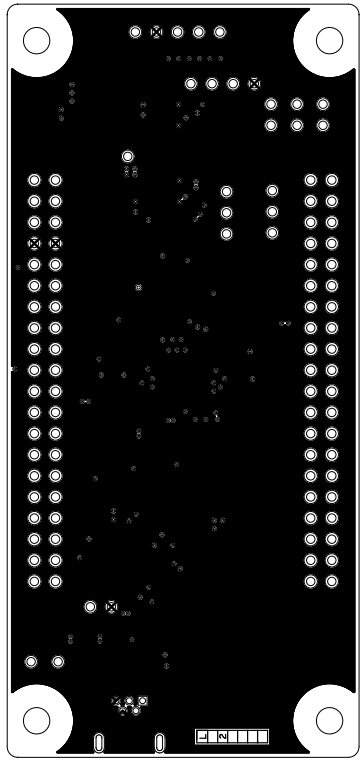

600-60327-01 REV03 GROUND1 LAYER

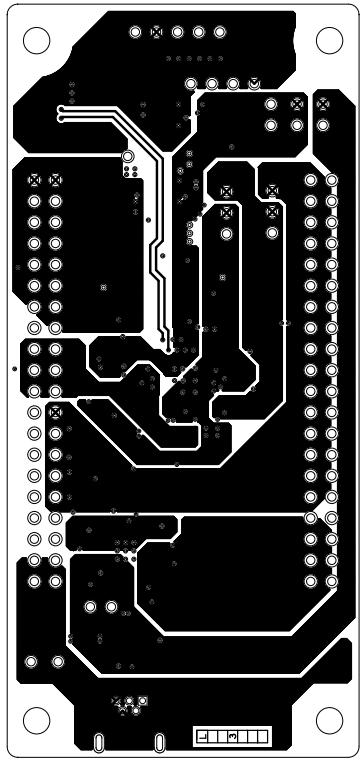

600-60327-01 REV03 POWER LAYER

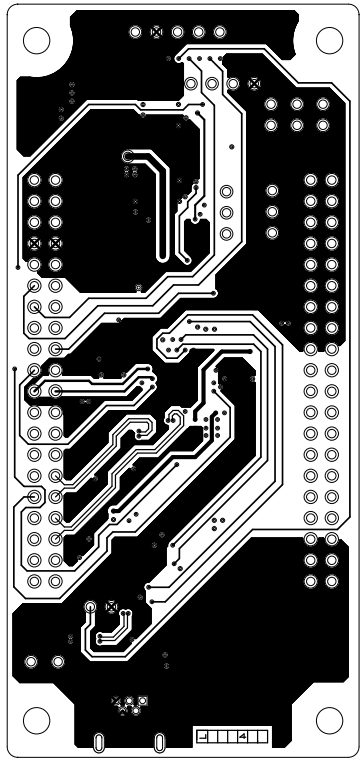

600-60327-01 REV03 SIGNAL LAYER

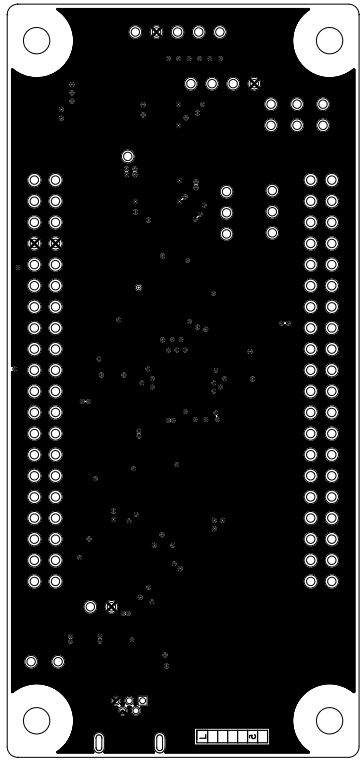

600-60327-01 REV03 GROUND2 LAYER

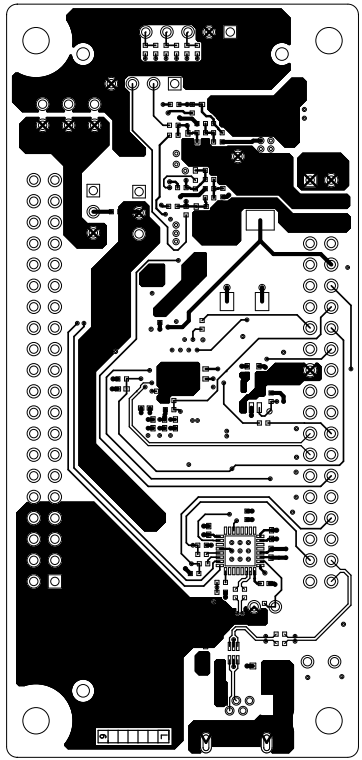

600-60327-01 REV03 SECONDARY SIDE

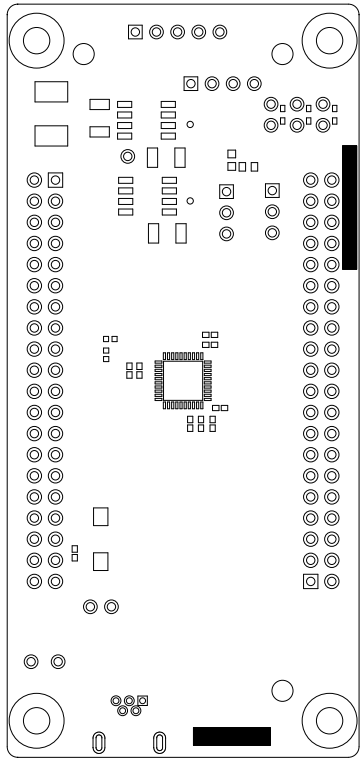

600-60327-01 REV03 PRIMARY SOLDERMASK

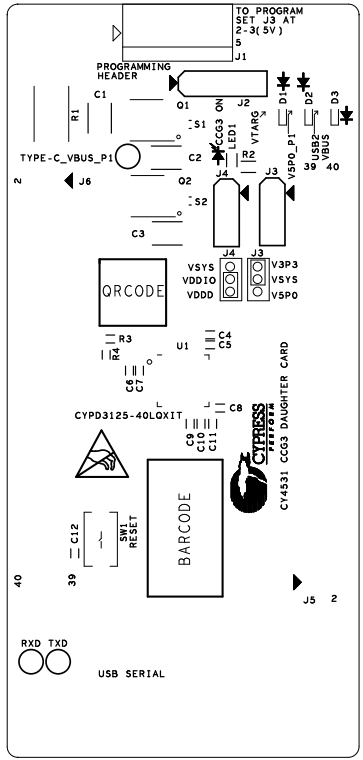

600-60327-01 REV03 PRIMARY SILKSCREEN

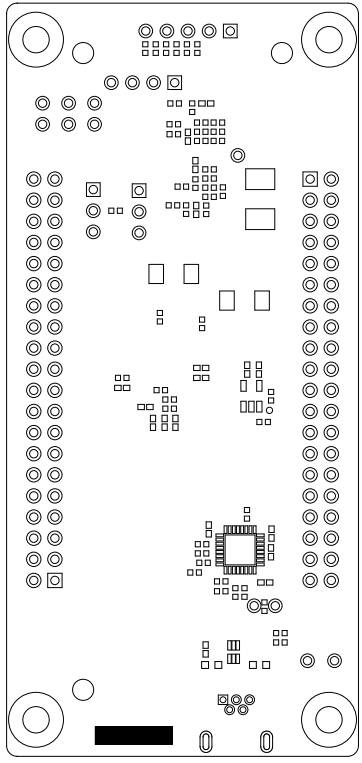

600-60327-01 REV03 SECONDARY SOLDER MASK

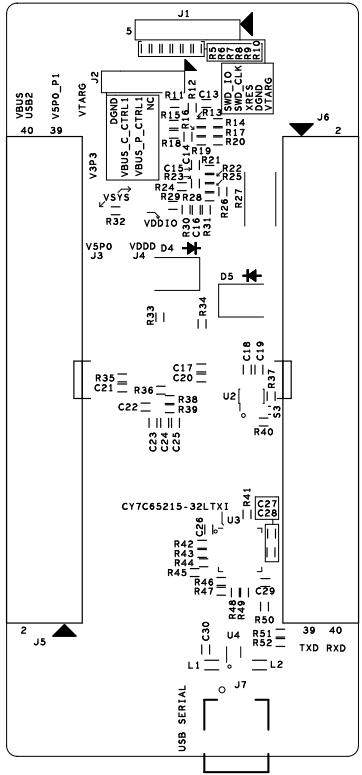

600-60327-01 REV03 SECONDARY SILKSCREEN